ES2060

TEBS G2.0/G2.1 Brake Module

Function

The Knorr-Bremse electronic braking systems for trailers (**TEBS G2.0/G2.1**) combine, in one compact assembly, the electronic control unit, the sensor technology and the pneumatic control.

The braking functions of anti-lock and load sensing control are both electronically managed within the module as integrated features. This provides more accurate and consistent control of the generated braking force including reduced hysteresis compared to a conventional braking system, thereby improving tractor-trailer compatibility, optimising the brake pad wear and helping to reduce the overall operating costs of the trailer.

The anti-compounding function is also housed within the module offering four delivery ports to the spring brake actuators.

The TEBS G2.0 Brake Module offers the following additional features compared with the first generation (TEBS4):

- an optional pneumatic auxiliary port (P28) which can be programmed to support all available auxiliary functions.
- variants of the module are available with push-to-connect (PTC) fittings.
- all electrical connections face downwards for improved accessibility.

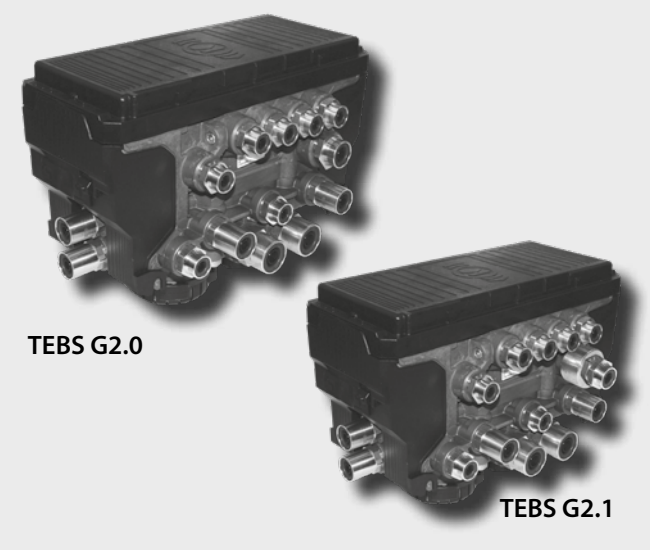

The TEBS G2.1 Brake Module is similar to the TEBS G2.0 Brake Module except that in place of the anti-compounding double check valve it has:

- an integrated emergency valve to provide the automatic brake function. The integrated emergency valve vents the spring brakes directly at the TEBS G2.1 Brake Module ensuring faster response. The emergency valve also performs the anti-compounding function.

When using the TEBS G2.1 Brake Module the park/shunt valve is connected to port 41 (in the same position as port 12 on the TEBS G2.0 Brake Module).

The service-proven anti-roll system, RSP (Roll Stability Program), is included as standard in all TEBS G2 Brake Modules.

TEBS G2.0

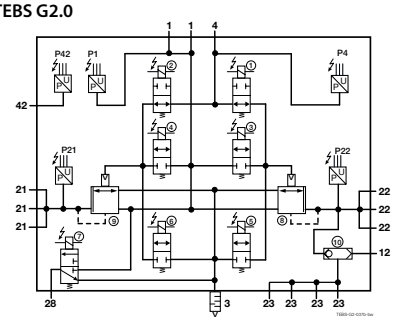

TEBS G2.1

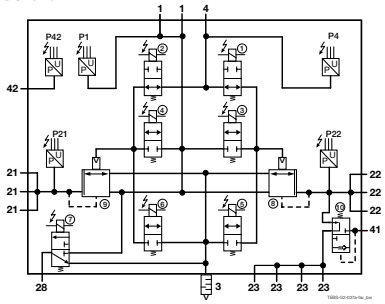

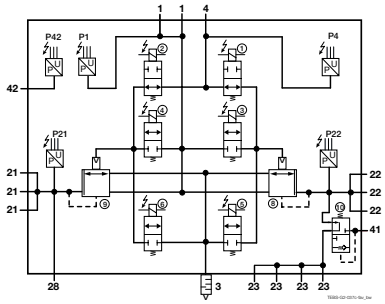

Technical Features

Operating pressure:	10.5 bar
Max. permissible pressure:	12.5 bar
Operating temperature range:	-40 °C to +65 °C
Weight:	5.7 kg approx.
Nominal Voltage:	9 to 32 V DC

Towing vehicle requirements

Trailers fitted with an electronic braking system (TEBS) only comply with the legal requirements of regulations 98/12/EC and ECE R13/11 supplement 8, when the towing vehicle is equipped with an electrical interface of any of the following specifications:

ISO 7638:	1985 5 Pin
ISO 7638:	1997 Part 1 (24 V) 5 Pin
ISO 7638:	1997 Part 1 (24 V) 7 Pin

Auxiliary Functions

The following auxiliary functions may be configured to the associated auxiliary connections of the TEBS G2.0/G2.1 Brake Modules:

1. Standard Auxiliary Functions:

1.1 Outputs

- **Tilt Angle:** This signal can be utilised to switch off a lifting device for the tipping body. See PD-214-F201, Document No. Y136126.
- **Fully Automatic Lift Axle Control:** The module can control up to two lift axle control valves, each valve may then be connected to 1 or 2 lifting axles. See PD-214-F101, Document No. Y136118.
- **Speed Pulse (SP):** When the vehicle exceeds a predetermined threshold speed, a signal of programmable duration is activated. This signal causes the Raise / Lower valve to automatically switch to the "drive" position. See PD-214-F106, Document No. Y136123.
- **Integrated Speed Switch (ISS):** This signal may be used to fulfil numerous operational requirements such as locking of steering axles etc. See PD-214-F107, Document No. Y136124.
- **Steering Axle Lock (SAL):** This signal can be utilised to lock the steering axle in the 'straight-ahead' condition. It is similar to ISS but can also be triggered from an input, e.g. Back-up Light (Reversing Lamps). See PD-214-F251, Document No. Y136130.
- **24 V Supply:** provides a permanent power supply that may be used to power additional brake and running gear systems / functions on the trailer. See PD-214-F006, Document No. Y136112.
- **ABS active:** Typically this function may be used to directly control a retarder installed on the trailer. See PD-214-F004, Document No. Y136110.
- **RSP active:** When the Roll Stability Program (RSP) of the trailer is active, a 24 V or a pneumatic output (depending on configuration) is transmitted by the brake module. See PD-214-F005, Document No. Y136111.
- **SLR:** When a function of TEBS causes the brakes to be applied a Stop Lamp Request signal can be generated. See PD-214-F401, Document No. Y137240.
- **P_{out}:** Brake modules that have the P28 function available, which can be programmed to provide a pneumatic output for any of the above functions or a constant pressure supply. See PD-214-F006, Document No. Y136112.

1.1 Inputs

- **Brake pad wear control (PW):** Input is received that the wear limit of at least one brake has been reached. See PD-214-F351, Document No. Y136131.
- **TH:** Traction Help actuated by a manual switch. See PD-214-F102, Document No. Y136119.
- **MH:** Manoeuvring Help actuated by a manual switch. See PD-214-F103, Document No. Y136120.
- **LL_ALL / LL_LAC1 / LL_LAC2_:** These functions lower lift axles as a result of a signal from a manual switch. See PD-214-F101, Document No. Y136118.
- **LLTH - Advanced Lift Axle Control:** This is a combined function which offers lift axle lowering and traction help via the same input. See PD-214-F101 and PD-214-F102, Document Nos. Y136118 and Y136119.
- **Road Laying Function (RLF):** This function is typically used when the trailer is working with a road laying machine. See PD-214-203, Document No. Y136128.
- **Body Lift Sensor (BLS):** This sensor is used with tipping trailers. See PD-214-F201, Document No. Y136126, PD-214-F202, Document No. Y136127 and PD-214-F203, Document No. Y136128.
- **Trailer Brake Release (TBR):** This function is typically used with extendable trailers. See PD-214-F301, Document No. Y137238.
- **Trailer Suspension Release (TSR):** This input is used when raise/lower valves are installed. See PD-214-F108, Document No. Y137237.
- **Back-up Light (Reversing Lamp (RL):** This takes an input from the reversing lamps and is typically used with the Steering Axle Lock function. See PD-214-F251, Document No. Y136130.

1. Non-Standard Auxiliary Functions:

Should a customer require a function other than those normally available it is possible to create a non-standard function by the use of a special file known as ADL (Auxiliary Design Language) produced by Knorr-Bremse following contact through one of its representatives. Once created, the special file can be written to the ECU of the brake module via the PC Diagnostic Program ECU*talk*®. The module offers a possibility to have an interface to the service braking system, under certain circumstances.

2. Stop lamp powering:

To obtain full functionality, any trailer electronic braking system requires a permanent power supply (achieved by using the legally specified ISO 7638 connection in 5 or 7 pin format); this ensures load sensing, anti-lock control and all auxiliary functions are automatically maintained. In the event of a failure of this power supply, whilst trailer braking will be maintained via the pneumatic back-up function, all electronically controlled functionality would no longer be active. Continued operation of the vehicle without electrical power, irrespective of axle load, may therefore result in higher brake operating temperatures leading to increased brake pad wear, tyre flat spotting and trailer instability. To overcome this problem, the TEBS G2 ECU can be installed so that it will continue to operate by taking power from the stop lamp circuit and thereby load sensing and anti-lock functions remain active.

Note:
Stop lamp powering should only be considered as a backup function to ensure some safety features are retained in the event of failure of the ISO 7638 connection.

Note:
When stop lamp powering is in operation in a 4S/3M or 6S/3M system configuration the module will switch to 2S/2M operation.

Legal Requirements

TEBS G2.0/G2.1 has been approved in accordance with the requirements of annex XIV of the Directive 98/12/EC and annex 19 of ECE Regulation 13 with respect to ABS performance. The system also fulfils the requirements of the ECE Regulation 13/11 Supplement 8 with respect to the prescribed requirements for vehicles with an electric control line and electric control transmission.

Approval	ECE Report No.	Knorr-Bremse Document No.
ABS approval	EB 154	Y038142
Electronics approval	EB 155	Y038143
RSP approval	EB 166	Y080682
Use of AC574AY Relay Valve with long pipes	EB 154 extension	Y158131

Additional Documentation

Documentation is available on the Knorr-Bremse website **www.knorr-bremseCVS.com** which gives detailed information about the electronic braking system such as a system description and detailed installation instructions.

TEBS G2 Family Product Manual Y037243

Options

All module variants offer:

- RSP.
- Operating voltage range 9 - 32 Volts.
- Four pneumatic ports to the spring brake actuators.
- Internal J1939 CAN (5 V TI CAN)
- Configuration of different braking characteristics for the CAN and pneumatic brake demands.

Additionally:

- "Standard" variants provide ABS configuration 2S/2M and "Premium" variants (TEBS G2.0 after internal Software version V03) offer up to 6S/3M (see page 5).
- TEBS G2.1 has an integrated automatic brake function.

Range Overview

The following table shows possible variants:

Part Number[1)]	Type Number	Module	P_{28}	PTC Fittings	ABS	Integrated Emergency Function	To be used with Park/ Shunt Valve	IAM Part Number[2)]
K019300	ES2060	G2.0 Premium	PS	no	2S/2M 4S/2M 4S/3M [3)] 6S/3M	no	AE4311	K019309
K019302				yes	2S/2M 4S/2M 4S/3M [3)] 6S/3M			
K019309				no	2S/2M 4S/2M 4S/3M [3)] 6S/3M			
K019310		G2.1 Premium			2S/2M 4S/2M 4S/3M [3)] 6S/3M	yes	AE4370 or AE4371[4)]	K019319
K019312				yes	2S/2M 4S/2M 4S/3M [3)] 6S/3M			
K019319				no	2S/2M 4S/2M 4S/3M [3)] 6S/3M			
K019340		G2.0 Standard	TP	no	2S/2M	no	AE4311	K019349
K019342				yes				
K019349				no				
K019350		G2.1 Standard				yes	AE4370	K019359
K019352				yes				
K019359				no				

1) The part number of the module will carry two suffices, firstly "V##" which represents the software revision of the product, e.g. V01, V02 etc., and secondly "N##" which defines the packaging requirements of different market sectors, e.g. N00, N50. Example: K019300V02N50 - is supplied with software to revision 02 and packaged as described below. Note: The N50 variant will be shipped in a box containing the data labels II39797F, II39796F and K112780N00. These data labels may also be ordered separately.
2) IAM versions (which require configuration) have a grey top cover, whereas OE versions have a black top cover.
3) Dependent of system configuration.
4) AE4370 for semi-trailers and centre-axle trailers. AE4371 for drawbar trailers.

Additional Parts:

Silencer:	K000847K50 (two required per module)
Blanking Plug for 8 mm pipe:	96210008
Blanking Plug for 12 mm pipe:	96210012
Blanking Plug for 15 mm pipe:	96210015
Blanking Plug for In-Out Connector	K026197V01N00
Blanking Plug for WSS Connector	K103003K50 (two required per module)
Side Cover:	K023401K50 (two required per module)
Port Filters	K108643K50 (contains 20 filters for Port 4)
Self-adhesive TEBS label	K112780N00 (supplied with the TEBS Module for mounting on the trailer)
Information sticker	II39796F (TEBS power supply)
EBS-System Plate	II39797F

Note:

The port filters and exhaust silencers are the only components of the TBES G2 Brake Modulator that require regular routine inspections to avoid any blocking by contamination. For details on servicing please refer to PD-214-F940, Document No. Y177724.

Pneumatic Connections

Port	Thread	Number	Used for	PTC Fittings [1] (to suit pipe size)
1.1	M22x1.5	1	Supply to Reservoir	15x1.5
1.2				
12[2]			Park/Shunt Valve	12x1.5
21	M16x1.5	3	Delivery to brake chambers on the side of the trailer with wheel speed sensors D and F	
22			Delivery to brake chambers on the side of the trailer with wheel speed sensors C and E	
23		4	Delivery to parking brake	8x1
4		1	Brake demand (Yellow Line)	
41[3]			Park/Shunt Valve	
42			Air spring pressure	
28			Test point or Pneumatic signal	

1) Not all part numbers are supplied with a set of fittings.
2) TEBS G2.0 modules only.
3) TEBS G2.1 modules only.

Pipe sizes

The following table defines the minimum bore of piping to be used to connect the reservoir to the module and the module to the respective brake actuators.

Pipe size for the connection between the air reservoir and the module		
Plastic pipe	Minimum inside diameter 12 mm It is recommended that both Supply ports are used and each is connected to the reservoir.	
Pipe size for the connection between the module and the service brake actuators		**Maximum length**
Plastic pipe	Minimum inside diameter 9 mm	5 m
Rubber hose	Minimum inside diameter 11 mm	

Electrical Connections

All module variants offer the following possible electrical connections for auxiliary equipment:

- AUXIO 1 electrical output (6, 12 or 24 V) or digital input
- AUXIO 2 electrical output (6, 12 or 24 V) or digital input
- AUXIO 3 electrical output (24 V) or digital input
- SENS_SUP external sensor supply or Tri-state input
- SENS_IN1 external sensor input or Tri-state input
- Input S-E digital input or Tri-state input
- Input S-F digital input or Tri-state input

Note:
Tri-state inputs allow control using a single wire connection where the following conditions will be recognised as requiring a change of state:

- Change from open circuit to 12 / 24 V
- Change from open circuit to ground

When configuring inputs it is recommended that the tri-state inputs on pins 4 and 5 are used first followed by sensor inputs S-E and S-F and then AUXIO connections on pins 1, 2 and 3.

Some variants also offer the possibility to use the port P_{28} to control pneumatic auxiliary equipment (see table on page 5).

In - Out Connector

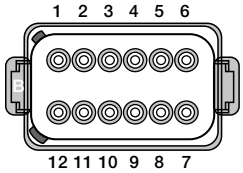

Pin Number	Function
1	AUXIO 1
2	AUXIO 2
3	AUXIO 3
4	Sensor Supply [SENS_SUP] (5V or Tri-state Input)
5	Sensor Input 1 [SENS_IN1] (Analogue or Tri-state)
6	Sensor Ground or Magic Eye or C3
7	Stop Lamp Supply (+)
8	Stop Lamp Ground (-)
9	J1939 CAN (5 V) Low
10	J1939 CAN (5 V) High
11	AuxRet 12 (Return for AUXIO 1 & 2)
12	AuxRet 3

Power Connector

Pin Number	Function
1	Battery Supply (+)
2	Electronic Supply (+)
3	Electronic Ground (-)
4	Battery Ground (-)
5	Warning Lamp
6	ISO 11992 CAN (24 V) High
7	ISO 11992 CAN (24 V) Low

Wheel Speed Sensor Connector

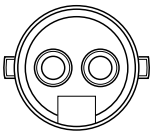

System	Connector	Function
2S/2M	S-C	Wheel Speed Sensor
	S-D	
	S-E	Optional Aux Input (Digital or Tri-state)
	S-F	
4S/2M 4S/3M	S-C	
	S-D	Wheel Speed Sensor
	S-E	
	S-C	

Note:
If no connections on the In-Out Connector are used a blanking plug (K026197V01N00) must be installed to prevent the ingress of moisture to the ECU.

Pneumatic Backup

If all electrical power supplies to the TEBS G2.0/G2.1 Brake Module are lost the system reverts to the Pneumatic Backup mode which provides the facility for the trailer to maintain normal pneumatic braking albeit without the load sensing and anti-lock functions.

The TEBS G2.0/G2.1 Brake Module has the ability to switch itself to the Pneumatic Backup mode and does so if the reservoir pressure drops below 2.5 bar. The module will switch back to normal operation when the reservoir pressure is restored.

The TEBS G2.0/G2.1 Brake Module also switches to Pneumatic Backup mode whenever the trailer is stationary and the service brake pressure is greater than 4.5 bar. This is to reduce electrical power consumption. The module will switch back to normal operation as soon as service brake pressure drops below 4.25 bar.

Braking with CAN demand only (Pneumatic "control" line missing)

When coupled to a tractor that supports ISO 11992 CAN communication with a 7 pin ISO 7638 connector, the TEBS module checks the "service brake demand" from the EBS 11 CAN message against the pneumatic "control" line brake demand measured at P4 on the TEBS module, if the "service brake demand" from EBS 11 is greater than 1 Bar for 1 Second without a corresponding signal at P4 the TEBS module detects a failure and alerts the driver by means of the yellow warning lamp. The brake performance in this condition is unchanged and will be controlled from the "service brake demand", however it is very important that the failure of the pneumatic control line is resolved promptly to avoid that a subsequent failure of the ISO 11992 CAN results in no braking on the trailer. Typical causes for the failure are the yellow coupling between the tractor and trailer not being connected or the pipe beingconstricted in some way e.g. blockage or kink.

Note:

A rupture of yellow line will be detected by the so called "Trailer Control Valve" in the tractor and then the tractor will dump the pressure in the "red line" causing the emergency braking function of the trailer to be activated during the brake event.

Installation and Mounting

General installation guidelines

- The protective covers for the electrical connections of the TEBS G2.0/G2.1 Brake Module must be fitted at all times when the vehicle is in use.
- During assembly the ports and electrical connections of the TEBS G2.0/G2.1 Brake Module and cabling must be protected against the ingress of contamination, e.g. sand blasting particles.
- The TEBS G2.0/G2.1 module must never be stored or transported with the exhaust ports pointing upwards.
- If a TEBS G2.0/G2.1 module has been damaged in transit or during the assembly, e.g. dropped on the floor, it must not, under any circumstances, be fitted to the vehicle.

Note:

If at any time the vehicle is to be welded using an electric welding tool the following has to be observed:

- Remove the "Power" and "In-Out" connectors from the module(s).
- Remove the wheel speed sensor connectors, ensure that when reassembling the sensors they are reconnected to the correct positions. Knorr-Bremse recommends that an End of Line (EOL) test is run using the diagnostic program ECU*talk*® following reassembly of the wheel speed sensors to ensure correct fitment.

Installation of the TEBS G2.0/G2.1 Brake Module

The following provides a guide to the installation of the TEBS G2.0/G2.1 Brake Module.

In the longitudinal direction, the deviation from centre of the bogie may be a maximum of ± 2.5 m however the maximum permitted pipe length of 5 m to the brake actuators must be observed.

Note:

When a self-steering or command steered axle is fitted the 'centre of the bogie' is deemed to be between the fixed axles.

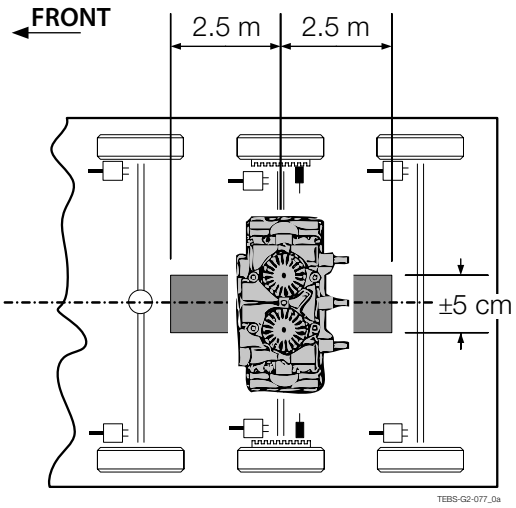

An ideal installation would be where the TEBS G2.0/G2.1 Brake Module is laterally positioned within 5 cm of the centre of the trailer (see figure), this would result in the respective pipe lengths being approximately equal for each axle. However it is possible to mount the TEBS G2.0/G2.1 Brake Module in other positions dependent on the design of the trailer and space available.

If the Roll Stability Program (RSP) is configured, special restrictions apply. See PD-214-F005, Document No. Y136111.

During installation, consideration must be given to being able to access the electrical connections and a minimum clearance must be observed (F > 50 mm) to ensure that covers can be removed. For the TEBS G2.0/G2.1 Brake Module a clearance (H > 25 mm) must be ensured below the exhaust silencers at the base of the valve; this must be checked when the suspension is deflated and on its bump stops (see figure).

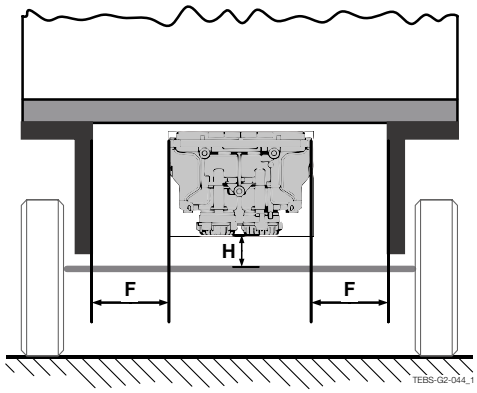

Cables

For information on suitable cables see PD-272-020, Document No. Y107795 and for cable installation guidelines see PD-272-005, Document No. Y136137.

Parameterisation

Before a trailer can be used on the road its braking performance must have been verified by a testing authority and be type approved. Part of this process is the requirement to fulfil the prescribed compatibility limits which means a number of braking parameters must be specified. This is normally achieved by means of a brake calculation taking into account the physical characteristics of the trailer and the recorded performance of braking components defining the respective brake chamber pressures to fulfil laden and unladen requirements. For the TEBS G2.0/G2.1 equipped trailer this would be carried out using the Knorr-Bremse brake calculation program BSD which has been specifically developed for this purpose. The main parameters which control the braking performance of the trailer are:

- Laden and unladen air spring pressures
- Laden and unladen axle loads
- Laden and unladen brake actuator delivery pressures for a control line pressure of 6.5 bar.
- Coupling head pressure when braking should commence.
- Inshot pressure generated when braking should commence.
- Dynamic tyre size

The diagnostic program ECU*talk*® is the primary means by which the parameters can be written to the TEBS G2.0/G2.1 Brake Module. This can be achieved by either entering individual parameters into the required fields or by reading the parameter values from a file produced by the brake calculation program BSD; the latter option being more reliable as the possibility of error has been removed. When a TEBS G2.0/G2.1 module is produced, default parameters are defined so that, in the event that a trailer is inadvertently not parameterised, a level of braking performance will always be available. When a data set of parameters is written to the TEBS G2.0/G2.1 Brake Module the operators PIN will also be written and stored as a finger print to identify who carried out the parameterisation.

Knorr-Bremse makes available four levels of PIN code access to PC Diagnostics ECU*talk*® as follows:

- Full version for OEMs
- EOL version for OEMs
- Service Plus for workshops
- Service Version for workshops

Load Sensing Plate

Following installation and parameterisation of the TEBS G2.0/G2.1 Brake Module it is possible to generate a load sensing plate by using the diagnostic program ECU*talk*®. Legislation requires that such a plate is fitted to all trailers. The plate generated by ECU*talk*® will not only contain information to carry out a check of the load sensing settings but also define additional TEBS G2 Brake Module configuration data and trailer related information. See section on "Stickers" and PD-214-F002, Document No. Y136109.

Diagnostics

The Knorr-Bremse diagnostic program ECU*talk*® is the primary means by which diagnosis of the TEBS G2.0/G2.1 Brake Module can be undertaken. For further details see PD-214-F355, Document No. Y136135.

Note:
For more information on ECU*talk*® see the Product Information Document No. Y051496 available at www.Knorr-BremseCVS.com.

Dimensions

TEBS G2

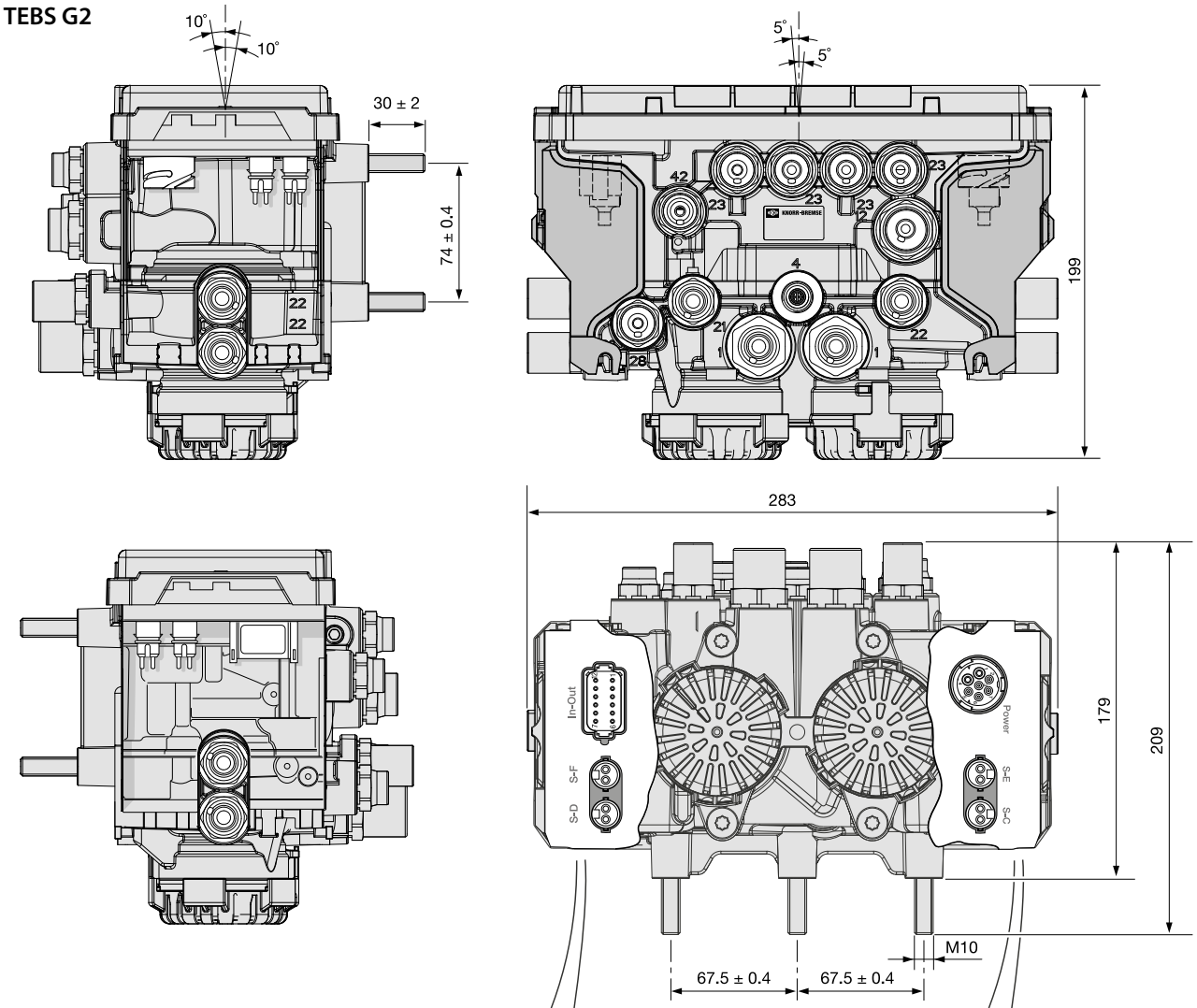

Detailed views of electrical connections

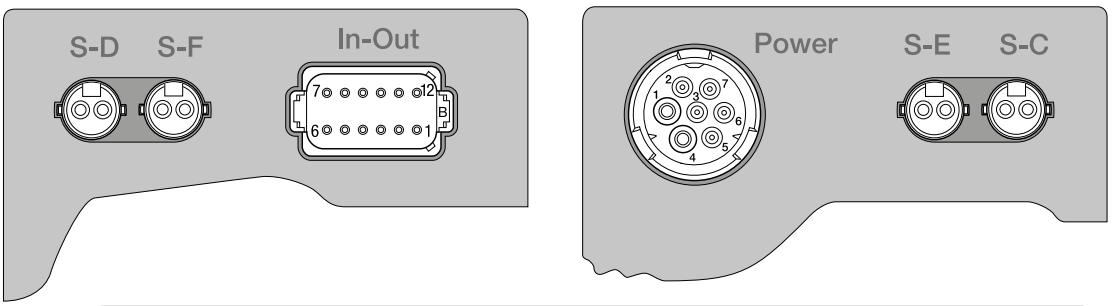

Note:
For information on individual connections and pin function, see table on page 8.

TEBS G2.1

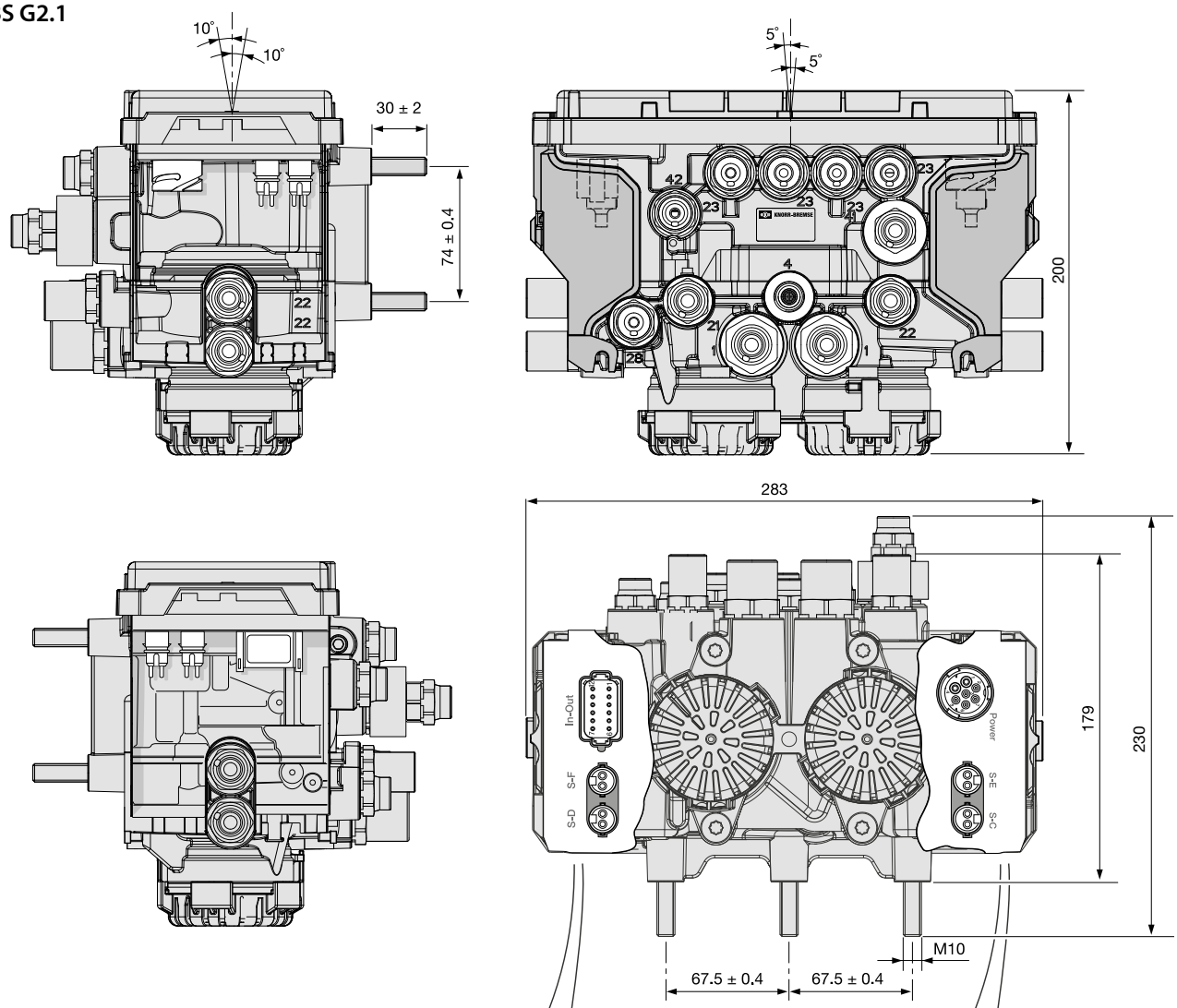

Detailed views of electrical connections

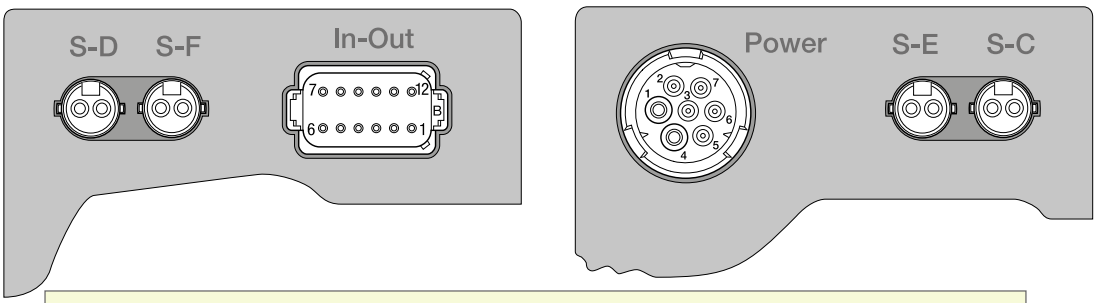

Note:
For information on individual connections and pin function, see table on page 8.

Labels

Information sticker, TEBS power supply

Part No.: **II39796F**

Size [mm]: 150 x 100

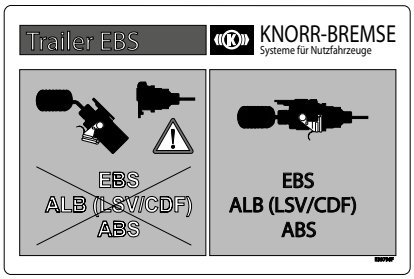

EBS-System Plate [1]:

Part No.: **II39797F**

Size [mm]: 170 x 110

1) The System Plate is a sticker which can be printed via the ECU*talk*® software and a laser printer. **Caution!** A laser printer must be used but do not print more than 5 stickers at a time.

K112780

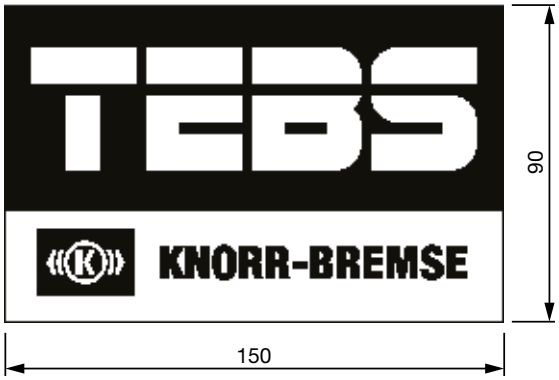

Revision Details

Rev. 007	January 2019	New layout
Rev. 008	October 2020	New layout, added note on page 6

KNORR-BREMSE

Knorr-Bremse Systems for Commercial Vehicles
Moosacher Strasse 80 | 80809 Munich | Germany
Tel: +49 89 3547-0
Fax: +49 89 3547-2767
truckservices.knorr-bremse.com

Copyright © Knorr-Bremse AG
All rights reserved, including industrial property rights applications. Knorr-Bremse AG retains any power of disposal, such as for copying and transferring.

Disclaimer
The information contained herein is intended for the exclusive use of trained persons within the commercial vehicle industry, and must not be passed on to any third party. All recommendations regarding products and their servicing or usage are with reference to Knorr-Bremse products and should not be considered applicable to products from other manufacturers. This information does not purport to be all-inclusive and no responsibility is assumed as a result of its use. We cannot accept any liability nor offer any guarantee regarding data accuracy, completeness or timeliness. The information does not represent any guarantee or ensured characteristics of the Products or Systems described. No liability can be accepted based on the information, its use, recommendations or advice provided. In no event may we be held liable for any damage or loss except in the case of wilful intent or gross negligence on our part, or if any mandatory legal provisions apply. This disclaimer is an English translation of a German text, which should be referred to for all legal purposes. Any legal disputes arising from the use of this information shall be subject to German law.

Note
All information is subject to change. A printed version of this document may therefore not correspond to the latest revision. To obtain the latest version, please visit our website truckservices.knorr-bremse.com or contact a Knorr-Bremse representative in your area.

If service work is carried out on a vehicle based on information provided herein, it is the responsibility of the workshop to ensure the vehicle is fully tested and in full functional order before the vehicle is returned into service. Knorr-Bremse accepts no liability for problems caused as a result of appropriate tests not being carried out.