Installation Instructions

BENDIX® E-7™ BRAKE VALVE MAINTENANCE KITS

Kit Contents		
Item No.	**Description**	**Qty.**
1+	Inlet Exhaust Valve Assembly	1
2	O-Ring (1.812" O.D.)	1
3	O-Ring (2.812" O.D.)	1
4+	Inlet Exhaust Valve Assembly	1
5	Relay Piston Spring	1
6	O-Ring (.750" O.D.)	1
7	O-Ring (2.625" O.D.)	1
*	Inner Stem Spring	1
*	Outer Stem Spring	1
8	Piston Return Spring	1
9	O-Ring (2.375" O.D.)	1
10	Rubber Spring	1
11	O-Ring (2.875" O.D.)	2
12	O-Ring (3.000" O.D.)	1
13	Diaphragm	1
*	Nut	1
14	Nut	1
**	Sealing Rings (.560" O.D.)	2
**	Sealing Rings (.755" O.D.)	2
**	Sealing Rings (.872" O.D.)	6
15	Stem Spring	1
16	Spring Seat Nut	1
17	Lubricant (BW-650M)	1

Bendix® E-7™ Brake Valve

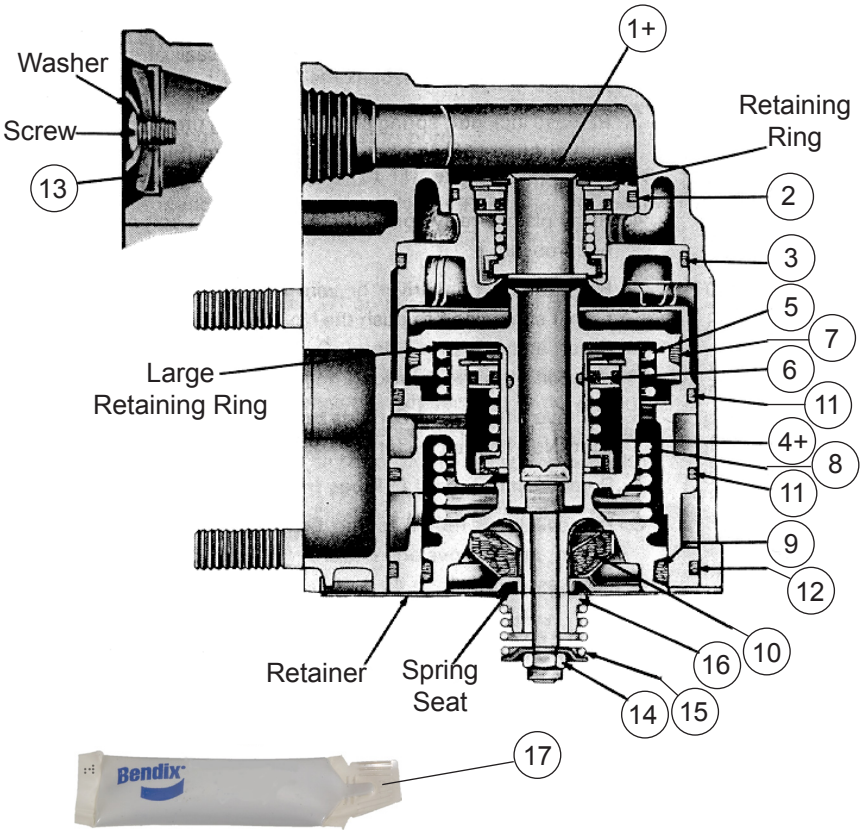

+ Separate Assemblies
Items 3 and 11 are identified by piece number. Items 2, 6, 7, 9, and 12 may be identified by the O.D. dimension.
* Required for early design.
** Certain E-7 valves are mounted to a firewall plate with a TP-4™ tractor protection valve on the engine compartment side. The sealing rings ** are used to seal the E-7 valve and the VM-1 respectively, to the mounting plate.
NOTE: Major Maintenance Kit is part no. 289353.

Figure 1 – Bendix® E-7™ Brake Valve Maintenance Kit Contents

GENERAL SAFETY GUIDELINES

WARNING! PLEASE READ AND FOLLOW THESE INSTRUCTIONS TO AVOID PERSONAL INJURY OR DEATH:

When working on or around a vehicle, the following guidelines should be observed AT ALL TIMES:

- ▲ **Park the vehicle on a level surface, apply the parking brakes and always block the wheels. Always wear personal protection equipment.**
- ▲ **Stop the engine and remove the ignition key when working under or around the vehicle. When working in the engine compartment, the engine should be shut off and the ignition key should be removed. Where circumstances require that the engine be in operation, EXTREME CAUTION should be used to prevent personal injury resulting from contact with moving, rotating, leaking, heated or electrically-charged components.**
- ▲ **Do not attempt to install, remove, disassemble or assemble a component until you have read, and thoroughly understand, the recommended procedures. Use only the proper tools and observe all precautions pertaining to use of those tools.**
- ▲ **If the work is being performed on the vehicle's air brake system, or any auxiliary pressurized air systems, make certain to drain the air pressure from all reservoirs before beginning ANY work on the vehicle. If the vehicle is equipped with a Bendix® AD-IS® air dryer system, a Bendix® DRM™ dryer reservoir module, or a Bendix® AD-9si® air dryer, be sure to drain the purge reservoir.**
- ▲ **Following the vehicle manufacturer's recommended procedures, deactivate the electrical system in a manner that safely removes all electrical power from the vehicle.**
- ▲ **Never exceed manufacturer's recommended pressures.**
- ▲ **Never connect or disconnect a hose or line containing pressure; it may whip and/or cause hazardous airborne dust and dirt particles. Wear eye protection. Slowly open connections with care, and verify that no pressure is present. Never remove a component or plug unless you are certain all system pressure has been depleted.**
- ▲ **Use only genuine Bendix® brand replacement parts, components and kits. Replacement hardware, tubing, hose, fittings, wiring, etc. must be of equivalent size, type and strength as original equipment and be designed specifically for such applications and systems.**
- ▲ **Components with stripped threads or damaged parts should be replaced rather than repaired. Do not attempt repairs requiring machining or welding unless specifically stated and approved by the vehicle and component manufacturer.**
- ▲ **Prior to returning the vehicle to service, make certain all components and systems are restored to their proper operating condition.**
- ▲ **For vehicles with Automatic Traction Control (ATC), the ATC function must be disabled (ATC indicator lamp should be ON) prior to performing any vehicle maintenance where one or more wheels on a drive axle are lifted off the ground and moving.**
- ▲ **The power MUST be temporarily disconnected from the radar sensor whenever any tests USING A DYNAMOMETER are conducted on a vehicle equipped with a Bendix® Wingman® system.**
- ▲ **You should consult the vehicle manufacturer's operating and service manuals, and any related literature, in conjunction with the Guidelines above.**

REMOVAL (If necessary)

1. Block the wheels, or hold the vehicle by means other than the air brakes, and exhaust air pressure from the reservoirs supplying air to the Bendix® E-7™ valve.
2. In most installations, the E-7 internal parts may be removed and replaced by removing the three cap screws which hold the pedal assembly in place and removing the pedal assembly. The internal parts may then be removed from the E-7 as described in disassembly.
3. If necessary to remove the E-7 from the firewall, identify the two supply and two delivery lines to their respective ports as connected to the brake valve. There may also be air lines to other brake devices inside the cab, which should be properly identified before disconnecting. In the case of a manifold type installation, the three cap screws which hold the manifold to the brake valve may be removed and the brake valve removed.

DISASSEMBLY

1. Remove retainer. Remove the lower static piston assembly.
2. Fashion a hook from a piece of wire and insert the hook through inlet / exhaust valve of upper static piston assembly. Pull firmly and remove the upper static piston assembly.

DISASSEMBLY (Upper Static Piston Assembly)

1. Remove and discard the o-rings (2 and 3).
2. Remove the retaining ring, and remove and discard the No. 2 circuit inlet exhaust assembly (1).

DISASSEMBLY OF LOWER STATIC ASSEMBLY (Current Design)

1. Apply firm pressure on the spring seat, which will compress the piston return spring. The locking groove in the piston is now accessible through the rectangular opening in the lower static piston body. Insert a wire or screwdriver into the locking groove, thus holding the static piston spring in compressed position.
2. Insert the wire or blade of the screwdriver through the relay piston exhaust passage into the slot of the stem, and remove the lock nut (14), being careful not to nick the exhaust seat of the relay piston.
3. Remove the lock nut, spring seat, stem spring (15), spring seat nut (16), rubber spring seat, and rubber spring (10).
4. The relay piston, relay spring (5) and stem bolt may now be removed.
5. Removal of the screwdriver or wire from the locking groove will permit spring load to push the No. 1 circuit piston from the lower static piston. *NOTE: Care should be used when removing the tool from the locking ring because of the spring load.*
6. Remove and discard the o-rings from the relay piston and the o-ring from the No. 1 circuit piston.
7. Remove and discard the o-rings from the lower static piston.

8. Remove the large retaining ring from the lower static piston, and remove and discard the No. 1 circuit inlet / exhaust valve assembly (4).

DISASSEMBLY - EXHAUST CHECK VALVE

Some E-7™ bake valves have an air exhaust check valve (13), screw and washer as shown on Fig. 1. If so, remove the screw and washer and discard the diaphragm (13). Replace screw and washer using the new diaphragm (13).

ASSEMBLY (Current Design)

NOTE: Before assembly, lubricate all o-rings, bores, and mating surfaces with silicone lubricant (17), pc. no. 291126 (Dow Corning 55-M). NO LUBRICATION on rubber spring.

1. Install the No. 2 circuit inlet-exhaust assembly (1) in the upper static piston, making certain the retaining ring is engaged in the groove of the upper static piston bore.
2. Install the o-rings (2 and 3) on the upper static piston and install in the valve body.
3. Install the No. 1 circuit inlet / exhaust assembly in the lower static piston making certain the retaining ring is engaged in the groove of the lower static piston bore.
4. Install the three (3) o-rings (2 of 11), and (12) in the grooves of the lower static piston assembly. (*NOTE: The larger diameter o-ring is installed in the groove nearest to the bottom of the piston assembly.*)
5. Install the o-rings (6 and 7) or relay piston and o-ring (9) on the No. 1 circuit piston.
6. Carefully clamp the No. 1 circuit piston in a soft-jawed vise taking care not to damage the exhaust seat or the outside diameter. Assemble the rubber spring (10) over the center stem of the center of the piston, then the spring seat and the spring seat nut (16). Tighten the spring seat nut until the end of the piston stem and the spring seat nut are flush.
7. Insert the relay piston spring (5) and relay piston in the top end of the lower static piston and No. 1 circuit piston spring (8) and No. 1 circuit piston assembly in the bottom of the lower static piston.
8. Install the stem bolt through the bore of the relay piston, invert the entire lower static piston assembly and position over a screwdriver mounted in a vise. Engage the screwdriver blade in the slot in the head of the stem.
9. Depress the No. 1 circuit piston assembly against the spring until the locking groove is accessible through the rectangular hole in the side of the lower static piston. Engage a screwdriver or wire in the locking groove and release the pressure on the piston.
10. Install the stem spring (15), spring seat, and stem nut (14). Torque to 20-30 in-lbs.
11. Install the lower static piston assembly in the valve body. Install the retainer, making certain the locking tabs engage the boss on the valve body.

PEDAL ASSEMBLY

Install the pedal assembly using the three cap screws. Check to be certain the plunger is in contact with the spring seat. The stop button should be adjusted so that the roller and plunger contact after adjustment, the roller should be able to be turned freely by thumb.

TESTING THE REBUILT E-7 DUAL BRAKE VALVE OPERATING

Check the delivery pressure of both the No. 1 and No. 2 circuits using test gauges known to be accurate. Depress the pedal to several positions between the fully released and fully applied positions, and check the delivered pressure on the test gauges to see that it varies proportionately with the movement of the brake pedal.

When the treadle is fully applied, the reading on the test gauges should fall off to zero promptly when the application is released. It should be noted that the No. 1 circuit delivery pressure will be about 2 psi greater than the No. 2 circuit delivery pressure with No. 1 and No. 2 circuit supply reservoirs at the same pressure. This is normal in this valve.

LEAKAGE CHECK

Make and hold an 80 psi application.

Coat the exhaust port and body of the brake valve with a soap solution. Leakage should not exceed a 1 in. bubble in 3 seconds at the exhaust port in both the applied and released position, no leakage is permitted anywhere else.

ASSEMBLY (PRE-5/74 PRODUCTION)

Prior to mid-1974 the lower static piston was of a slightly different design. Additional parts required for this revision are indicated by a single asterisk. Parts 14, 15, and 16 are not required.

1. Disassemble the stem assembly and discard the inner and outer stem springs. Reassemble the stem assembly using new inner and outer stem springs provided in the kit.
2. Install the stem assembly by inserting it through the bore of the relay piston.
3. Install the relay piston spring (this is the lighter of the two springs), relay piston, primary piston spring and primary piston. Place a screwdriver in a vise with the blade pointing up. Place the lower static piston so that the stem (in the bore of the relay piston) is over the blade of the screwdriver. Compress the primary piston until the locking slot in the primary piston is accessible and insert a piece of wire or screwdriver. This will temporarily lock the assembly together. Extreme care should be used so that the secondary inlet/exhaust valve seat (which is the stem of the relay) piston is not damaged.

4. Install the rubber spring, spring seat, washer and short lock nut by engaging a few threads.
5. Compress the primary piston and remove the screwdriver or wire from the locking groove of the primary piston.
6. Place the piston assembly so that the screwdriver blade (held in vise) is in the slot of the stem. While the stem is held by the screwdriver blade, tighten the lock nut securely.
7. Install the lower static piston assembly in the valve body. Install the retainer, making certain the locking tabs engage the boss on the valve body.
8. Proceed with the remainder of the assembly and test as in previous instructions.

For complete details on the operation maintenance of this device, refer to Bendix Service Data Sheet SD-03-818, available on bendix.com.