Installation Instructions

BENDIX® TU-FLO® 501 COMPRESSOR PISTON RING KIT

Kit Contents					
		Ring Quantity			
		Item 1	Item 2	Item 3	
Ring Kit Part No.	Description	Solid Compression Ring	Expander Ring	Double-Rail Oil Control Ring	Piston Rings
106105	Standard Size	6	4	4	5
106106	.010" Oversize	6	4	4	5
106107	.020" Oversize	6	4	4	5
106108	.030" Oversize	6	4	4	5
286183	Standard Size	4	2	2	3
286184	.010" Oversize	4	2	2	3
286185	.020" Oversize	4	2	2	3
286186	.030" Oversize	4	2	2	3
NOTE: Each kit services two (2) pistons.					

Bendix® Tu-Flo® 501 Compressor

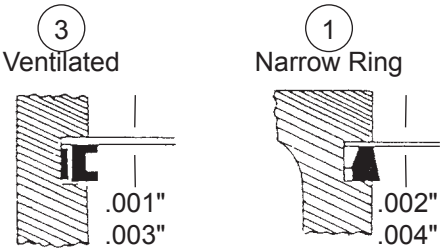

1 & 3
Correct Gap Clearance
with Ring in Cylinder

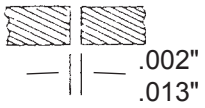

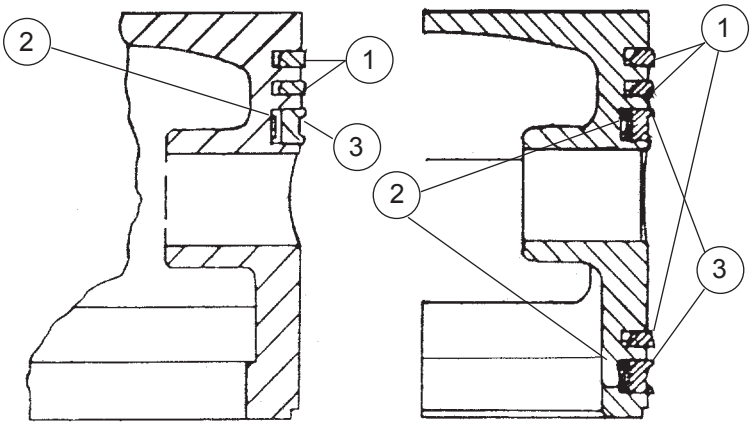

Figure 1 – Bendix® Tu-Flo® 501 Piston Ring Configuration

GENERAL SAFETY GUIDELINES

WARNING! PLEASE READ AND FOLLOW THESE INSTRUCTIONS TO AVOID PERSONAL INJURY OR DEATH:

When working on or around a vehicle, the following guidelines should be observed AT ALL TIMES:

- ▲ **Park the vehicle on a level surface, apply the parking brakes and always block the wheels. Always wear personal protection equipment.**
- ▲ **Stop the engine and remove the ignition key when working under or around the vehicle. When working in the engine compartment, the engine should be shut off and the ignition key should be removed. Where circumstances require that the engine be in operation, EXTREME CAUTION should be used to prevent personal injury resulting from contact with moving, rotating, leaking, heated or electrically-charged components.**
- ▲ **Do not attempt to install, remove, disassemble or assemble a component until you have read, and thoroughly understand, the recommended procedures. Use only the proper tools and observe all precautions pertaining to use of those tools.**
- ▲ **If the work is being performed on the vehicle's air brake system, or any auxiliary pressurized air systems, make certain to drain the air pressure from all reservoirs before beginning ANY work on the vehicle. If the vehicle is equipped with a Bendix® AD-IS® air dryer system, a Bendix® DRM™ dryer reservoir module, or a Bendix® AD-9si® air dryer, be sure to drain the purge reservoir.**
- ▲ **Following the vehicle manufacturer's recommended procedures, deactivate the electrical system in a manner that safely removes all electrical power from the vehicle.**
- ▲ **Never exceed manufacturer's recommended pressures.**
- ▲ **Never connect or disconnect a hose or line containing pressure; it may whip and/or cause hazardous airborne dust and dirt particles. Wear eye protection. Slowly open connections with care, and verify that no pressure is present. Never remove a component or plug unless you are certain all system pressure has been depleted.**
- ▲ **Use only genuine Bendix® brand replacement parts, components and kits. Replacement hardware, tubing, hose, fittings, wiring, etc. must be of equivalent size, type and strength as original equipment and be designed specifically for such applications and systems.**
- ▲ **Components with stripped threads or damaged parts should be replaced rather than repaired. Do not attempt repairs requiring machining or welding unless specifically stated and approved by the vehicle and component manufacturer.**
- ▲ **Prior to returning the vehicle to service, make certain all components and systems are restored to their proper operating condition.**
- ▲ **For vehicles with Automatic Traction Control (ATC), the ATC function must be disabled (ATC indicator lamp should be ON) prior to performing any vehicle maintenance where one or more wheels on a drive axle are lifted off the ground and moving.**
- ▲ **The power MUST be temporarily disconnected from the radar sensor whenever any tests USING A DYNAMOMETER are conducted on a vehicle equipped with a Bendix® Wingman® system.**
- ▲ **You should consult the vehicle manufacturer's operating and service manuals, and any related literature, in conjunction with the Guidelines above.**

IMPORTANT

Depending upon the compressor part number, new and remanufactured Bendix® Tu-Flo® 501 compressors use either a 3 or 5 ring piston. In addition to the part number, compressors using the 5 ring piston can be identified by the circled numeral "5" on the nameplate to the right of the Bendix part number. Ring kits designed for use on the 5 ring piston can also be used to service the equivalent size (standard, .010" O.S., .020" O.S., etc.) 3 ring piston since the ring design is identical for both.

INSTALLATION

1. Install the rings on the pistons in the proper grooves with the bevel or "pip" mark (if any) toward the top of the piston. (*Refer to Figure 1.*)
2. Install the solid compression ring (1) in the appropriate piston ring grooves. Using the piston, push the ring to the mid point of the cylinder bore and check the ring gap. (*Refer to Figure 1.*)
3. Install the expander ring (2) and the double-rail oil control ring (3) in their appropriate piston ring groove. Check the ring clearance in piston ring groove. (*Refer to Figure 1.*)
4. Rotate the piston rings in their respective groove so that each gap is at least 90° from the previous ring's gap. Position the ring gaps so that all of them remain outside the compressor inlet valve throat area in the cylinder block. (*Refer to Figure 2.*)

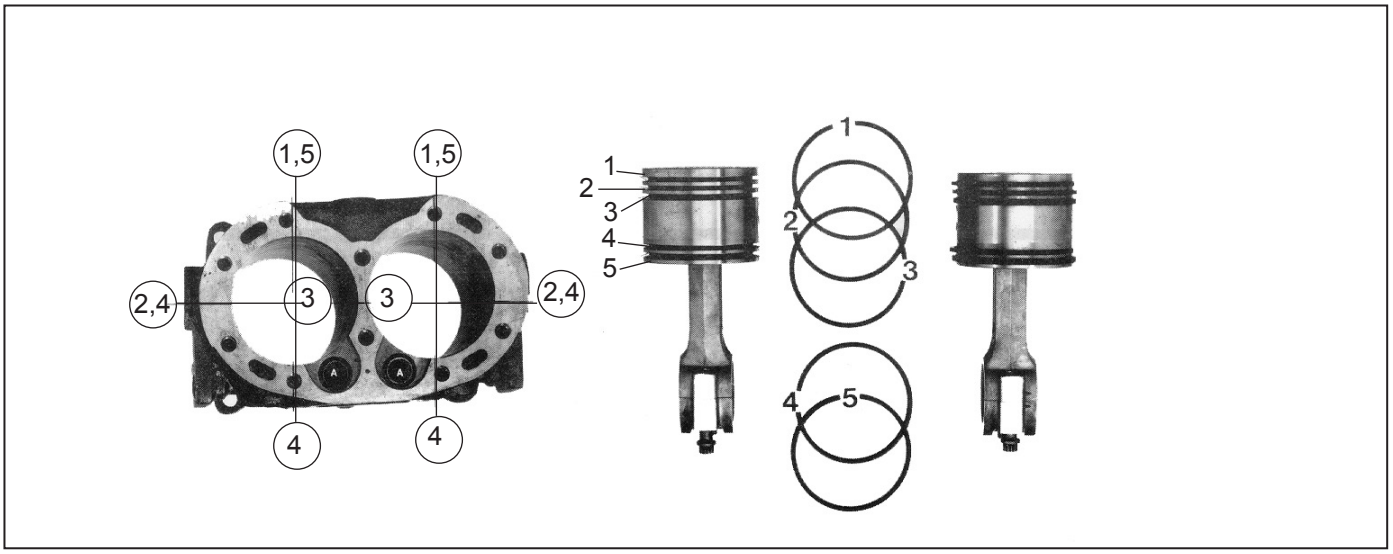

Figure 2 – Ring Gap Positioning

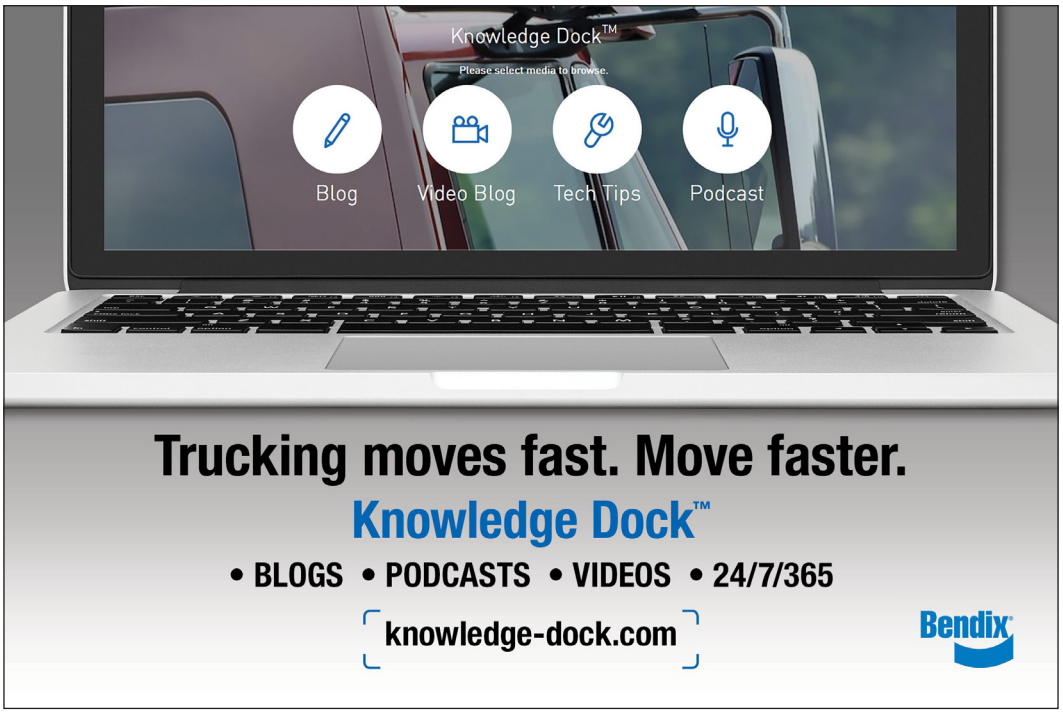

Log-on and Learn from the Best
On-line training that's available when you are – 24/7/365.
Visit www.brake-school.com.