Installation Instructions

BENDIX® AIR DISC BRAKE DIAPHRAGM REPLACEMENT KIT

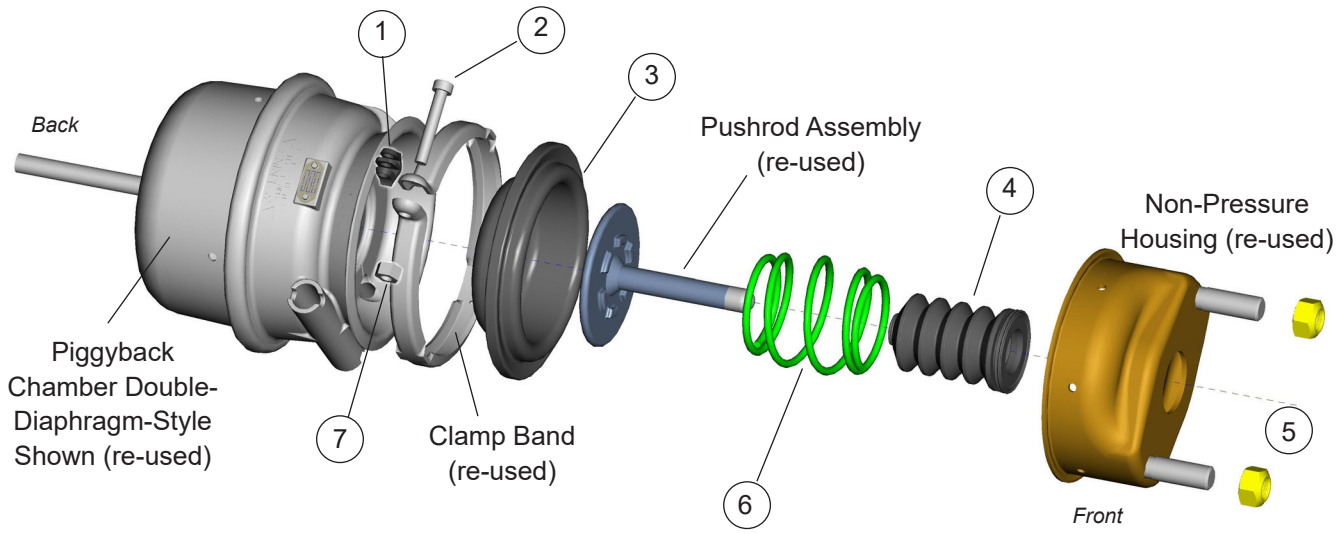

Kit Contents		
Item No.	**Description**	**Qty.**
1	Clamp Band Spacer	1
2	Clamp Band Bolt	1
3	Diaphragm	1
4	Bellows	1
5	Lock Nut	2
6	Return Spring	1
7	Clamp Band Nut	1
-	Grease Packet	1

***Figure 1** – Spring Brake Maintenance Components*

KIT DESCRIPTION

See Figure 1. This kit contains the components needed to replace all serviceable items of the spring brake.

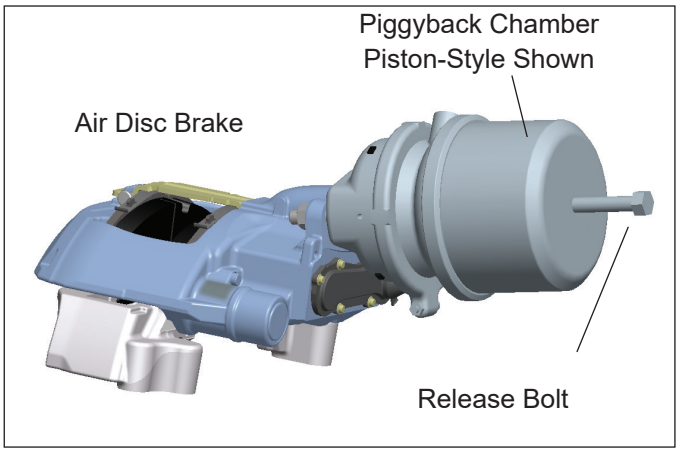

Figure 2 – Air Disc Brake Showing Piston-Style Piggyback Spring Brake

PRINTER: DO NOT REDUCE THE SIZE OF THIS DOCUMENT.

GENERAL SAFETY GUIDELINES

WARNING! PLEASE READ AND FOLLOW THESE INSTRUCTIONS TO AVOID PERSONAL INJURY OR DEATH:

When working on or around a vehicle, the following guidelines should be observed AT ALL TIMES:

- ▲ Park the vehicle on a level surface, apply the parking brakes, and always block the wheels. Always wear personal protection equipment.
- ▲ Stop the engine and remove the ignition key when working under or around the vehicle. When working in the engine compartment, the engine should be shut off and the ignition key should be removed. Where circumstances require that the engine be in operation, EXTREME CAUTION should be used to prevent personal injury resulting from contact with moving, rotating, leaking, heated, or electrically charged components.
- ▲ Do not attempt to install, remove, disassemble, or assemble a component until you have read, and thoroughly understand, the recommended procedures. Use only the proper tools and observe all precautions pertaining to use of those tools.
- ▲ If the work is being performed on the vehicle's air brake system, or any auxiliary pressurized air systems, make certain to drain the air pressure from all reservoirs before beginning ANY work on the vehicle. If the vehicle is equipped with a Bendix® AD-IS® air dryer system, a Bendix® DRM™ dryer reservoir module, a Bendix® AD-9si®, AD-HF®, or AD-HFi™ air dryer, be sure to drain the purge reservoir.
- ▲ Following the vehicle manufacturer's recommended procedures, deactivate the electrical system in a manner that safely removes all electrical power from the vehicle.
- ▲ Never exceed manufacturer's recommended pressures.
- ▲ Never connect or disconnect a hose or line containing pressure; it may whip and/or cause hazardous airborne dust and dirt particles. Wear eye protection. Slowly open connections with care, and verify that no pressure is present. Never remove a component or plug unless you are certain all system pressure has been depleted.
- ▲ Use only genuine Bendix® brand replacement parts, components, and kits. Replacement hardware, tubing, hose, fittings, wiring, etc. must be of equivalent size, type, and strength as original equipment and be designed specifically for such applications and systems.
- ▲ Components with stripped threads or damaged parts should be replaced rather than repaired. Do not attempt repairs requiring machining or welding unless specifically stated and approved by the vehicle and component manufacturer.
- ▲ Prior to returning the vehicle to service, make certain all components and systems are restored to their proper operating condition.
- ▲ For vehicles with Automatic Traction Control (ATC), the ATC function must be disabled (ATC indicator lamp should be ON) prior to performing any vehicle maintenance where one or more wheels on a drive axle are lifted off the ground and moving.
- ▲ The power MUST be temporarily disconnected from the radar sensor whenever any tests USING A DYNAMOMETER are conducted on a vehicle equipped with a Bendix® Wingman® system.
- ▲ You should consult the vehicle manufacturer's operating and service manuals, and any related literature, in conjunction with the Guidelines above.

⚠ WARNING

Follow all standard industry safe maintenance practices, including the General Safety Guidelines listed on page two of these instructions.

Piggyback assemblies contain a loaded compression spring. Property damage, serious injury, or death may occur if instructions are not followed completely.

DO NOT service a spring brake chamber if it has structural damage of any kind. Replace the complete assembly. Dismount a damaged spring brake by first cutting the service pushrod with an acetylene torch to relieve any force it might have.

Do not strike any part of a spring brake chamber for any reason. This may cause structural damage.

Be careful not to drop a spring brake chamber at any time. If dropped, inspect for signs of structural damage. Replace complete assembly if damaged.

The emergency diaphragm of a piggyback assembly cannot be replaced. Replace the whole piggyback spring brake assembly.

Always work from the side of the spring brake chamber. Never work from the front or back.

HOW TO MECHANICALLY RELEASE ("CAGE") AND REMOVE SPRING BRAKES

As needed, see Sections A or B.

A. HOW TO CAGE AND REMOVE DOUBLE DIAPHAGM SPRING BRAKES

(See B. on pg. 4 for the removal of piston-style actuators).

Follow all standard industry safe maintenance practices, including the General Safety Guidelines listed on page two of these instructions.

⚠ WARNING

DO NOT MECHANICALLY RELEASE (CAGE) THE SPRING IF THERE IS ANY STRUCTURAL DAMAGE TO THE ACTUATOR. CAGING THE SPRING IN SUCH A CHAMBER MAY CAUSE SERIOUS INJURY OR DEATH!

1. This procedure will be made much easier if air pressure (100-120 psi; 6.6-8.0 bar) is used to collapse the power spring by applying air to port "12", before turning the release bolt nut with a hand wrench or simply by hand.

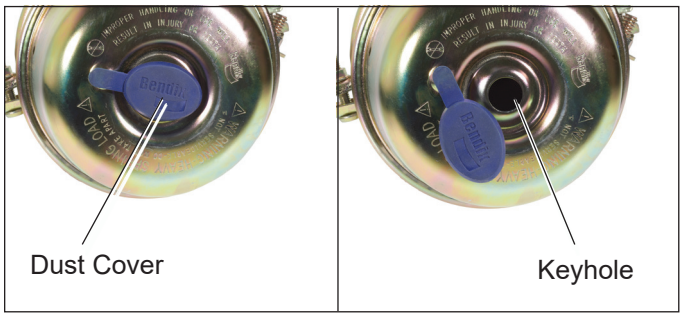

Figure 3 – Dust Cover Removal (Actual Dust Cover Design May Vary)

2. Remove the dust cap or weather seal from the keyhole in the center of the piggyback spring brake chamber.
3. Remove the release tool assembly from the side pocket of the adapter base.
4. Insert the release tool (T-bolt) through the release tool keyhole and into the pressure plate. Pull on the release tool to seat it properly in the pressure plate. *See Figure 4.*
5. Turn the release tool one quarter turn clockwise.
6. Assemble the release tool washer and nut onto the release bolt and finger tighten only. If caging is being done manually - it is recommended that some type of lubrication be applied to the release bolt threads prior to tightening to prevent galling or stripping.
7. To cage the main spring, tighten the release nut with a hand wrench and ensure the service pushrod is retracting.
8. Do not over-torque the release tool assembly. Maximum torque is 35 ft/lbs. The maximum releasing torque should not exceed 50 lb-ft (67.8 Nm). If the spring has not previously been compressed by the use of air (Step 1, above), verify that the rotor is now free to rotate and that the brake is released.

⚠ WARNING

Do not use an impact wrench. An impact wrench may over-torque the release tool and cause damage to the pressure plate.

⚠ IMPORTANT

To ensure the power spring is fully caged, the extended release tool length should be fully backed out.

9. The threaded portion of the release tool will extend approximately 2.9 inches out of the nut when fully released.

⚠ CAUTION

Before releasing the air pressure, check to make sure that hands, etc. are clear of any moving parts.

10. Release the air pressure from the emergency/parking port (port 12) after caging and prior to any disassembly or removal from the vehicle. Ensure air pressure is removed from all air reservoirs before removing the air hoses or working on the spring brake.
11. Record the orientation of the spring brake before removing it to be sure that the replacement is installed the same way.
12. Remove the mounting nuts and hoses.

B. HOW TO CAGE AND REMOVE PISTON-STYLE NG-3™ SPRING BRAKES

Follow all standard industry safe maintenance practices, including the General Safety Guidelines listed on page two of these instructions.

⚠ WARNING

DO NOT MECHANICALLY RELEASE (CAGE) THE SPRING IF THERE IS ANY STRUCTURAL DAMAGE TO THE ACTUATOR. CAGING THE SPRING IN SUCH A CHAMBER MAY CAUSE SERIOUS INJURY OR DEATH!

⚠ WARNING

When caging or removing a piston-style spring brake from a vehicle, NEVER ATTEMPT TO CAGE OR UN-CAGE THE PARKING BRAKE WITHOUT APPLYING AIR PRESSURE (100 psi) TO THE PARKING BRAKE PORT (12). Attempting to cage a piston-style spring brake without applying air pressure may damage the caging bolt and/or the parking brake which could result in the need to replace the spring brake actuator. In cases where you suspect damage to the actuator due to an incorrect caging method, inspect for damage to the caging bolt, and also check to see if the spring brake chamber is holding air. If damage/leakage is found, replace the device.

1. Connect a regulated air line to the parking brake port (12) of the actuator.
2. Gradually supply 100 psi of air pressure to the parking brake port (12) of the actuator to compress the spring.
3. Rotate the release bolt counterclockwise until resistance is encountered.

⚠ WARNING

DO NOT USE AN IMPACT WRENCH. AN IMPACT WRENCH MAY DAMAGE THE INTERNAL CAGING MECHANISM PISTON AND HOUSING.

4. Seat the release bolt “D” in the caged position by using torque of 25 lb-ft. The release bolt and nut should extend out of the housing approximately 3.5" when the spring is caged.

⚠ CAUTION

Before releasing the air pressure, check to make sure that hands, etc. are clear of any moving parts.

5. With hands clear of any moving parts, slowly release the air pressure to the parking brake port (12). Be sure to exercise caution to prevent the pinching of fingers.

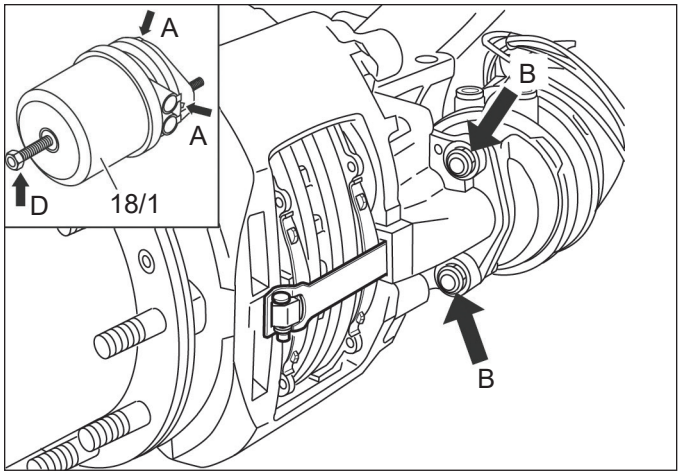

Figure 4 – Piston-Style Spring Brake Actuator Caging and Removal

Note: The release bolt “D” is not designed to be removed from the actuator; the nut is permanently attached to the release bolt.

REMOVAL, DISASSEMBLY AND INSPECTION

Tools required: 13mm box wrench, 6mm Allen®/hex key, welding pliers.

IN ALL CASES: FOR SERVICE, PISTON-STYLE OR DOUBLE-DIAPHRAGM ACTUATORS

1. Exhaust the air from the brake chamber(s) by using the dash-mounted air control valve. With all air pressure drained from the system, disconnect the air hoses from the brake chamber.
2. While supporting the brake chamber in position, remove and discard the brake chamber mounting nuts *(Figure 4, arrows marked “B”)*. Remove the brake chamber.

On a work bench, or similar workspace:

3. Remove the nuts and washers used with the mounting bolts.
4. Remove and discard the clamp nuts and hoses.
5. Clean the exterior of the actuator as needed.
6. Record the angle of the service and spring portions of the actuator or mark on the actuator using a pen, etc. to help with obtaining the correct orientation of the non-pressure housing in re-assembly.
7. Remove the clamping band nut, spacer, and the band itself.
8. Remove the service diaphragm, spring, and bellows; discard.
9. Inspect the parts that will be re-used for wear and/or damage. If severe damage is found, replace the actuator. Clean as needed, remove old grease and take particular care to inspect the surfaces that come into contact during assembly.

ACTUATOR ASSEMBLY

NOTE: For proper installation, the service or spring brake chamber will need to be clocked (rotated) to its original position with respect to the non-pressure housing.

1. Install the replacement bellows, using a small amount of the grease supplied on the surfaces that contact the pushrod.
2. Install the spring onto the pushrod assembly and install, through the bellows, into the non-pressure housing. Clamp the pushrod below the pushrod tip with locking pliers, taking care not to damage the boot.
3. Install temporary nuts onto the non-pressure housing and clamp these into a vise.
4. Taking care not to get any grease onto the diaphragm, install it in place on the non-pressure housing. *See Figure 4* to see the correct position to place the alignment of the diaphragm and the clamp in the next step.

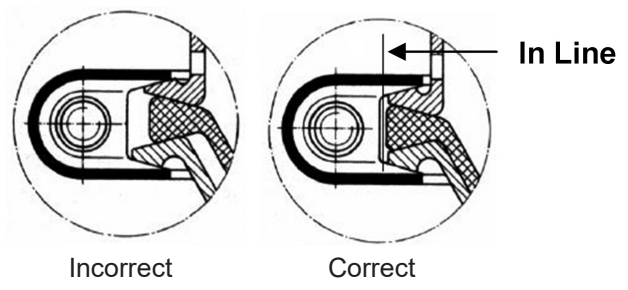

Figure 5 – Correct Diaphragm Position

5. Place the pressure housing or piggyback actuator in place over the diaphragm, ensuring that they are centered.
6. Align the clamp band to the correct position and with the spacer in place between the flanges, use welding pliers to bend the band around the housing. Insert the bolt and engage the clamp band nut. Before tightening, check that the two housings and the diaphragm are aligned correctly - *See Figure 5.* Torque the clamp band nut to an initial torque of 11 ft. lbs. Leak test the band with a soap solution while the actuator is still on the workbench. (100 SCCM leakage is permissible.) Adjust and retighten as needed to a maximum final torque of 13 ft. lbs.
7. Apply a small amount of grease to the pushrod tip before installing it onto the air disc brake.
8. Apply the remaining grease into the lever cup of the air disc brake caliper.

ACTUATOR INSTALLATION

1. Install the service/spring brake assembly using the new hardware. Torque the mounting nuts to 133±7 ft. lbs.
2. Reconnect the air hoses to their original locations.
3. Apply pressure to the service port of the spring brake. Do not exceed 150 psi. Test for leaks around the clamps. No leaks are acceptable.
4. For double-diaphragm spring brakes: Uncage the main spring and return the release tool into the release tool side pocket.
5. In the case of piston-style spring brakes: Apply shop air to the spring side of the actuator and then release the bolt.

⚠ WARNING

Check for proper service and emergency operation after servicing any part of the brake chamber(s). Check the brake adjustment if the combination spring brake was removed/installed. (Follow vehicle manufacturer's instructions to adjust the brakes).

B2BENDIX.COM
24/7/365 ACCESS
FULL SERVICE AT YOUR FINGERTIPS

TECHNICAL SUPPORT
1-800-AIR-BRAKE (1-800-247-2725)
TECHTEAM@BENDIX.COM

BRAKE-SCHOOL.COM
WEB-BASED TRAINING
LOG ON AND LEARN FROM THE BEST

Bendix®