AC597.

Trailer Control Valves (TCV)

Function

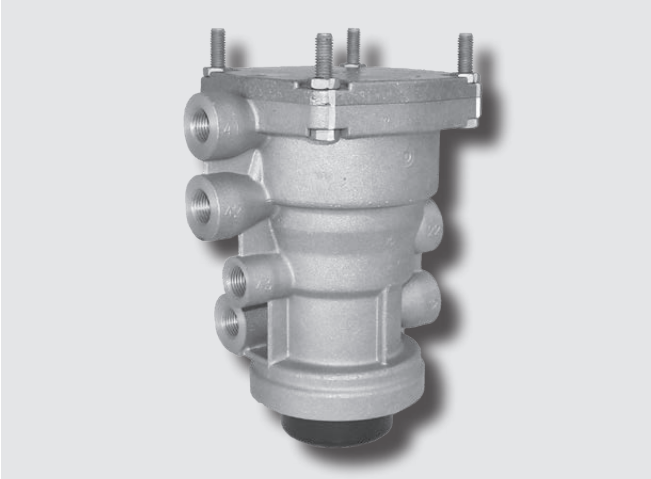

The **Trailer Control Valve** is designed to enable the operation of the dual service brake system on the towing vehicle to produce corresponding graduated service braking on the trailer.

Should one half of the towing vehicle service brake system fail, the design of the Trailer Control Valve ensures that the remaining half of the system will still be capable of applying the trailer service brakes.

Trailer Control Valves can have a predominance feature which provides a higher level of braking on the trailer than on the towing vehicle. On the AC597 range of Trailer Control Valves the level of predominance can be pre-set between 0,0 and +0,5 bar (measured at 2 bar control pressure).

When the parking brake of the towing vehicle is applied as the parking or secondary brake, the hand control valve also applies the trailer brakes by means of an inverse pressure signal to the Trailer Control Valve. This feature ensures the simultaneous applications of the trailer brakes and the towing vehicle brakes.

The AC597 range of Trailer Control Valves have an integral 'choke type' Supply Dump Valve feature which ensures the automatic application of the trailer brakes during a full brake application in case of failure of the control line between the towing vehicle and the trailer.

Standard Symbol as DIN ISO 1219

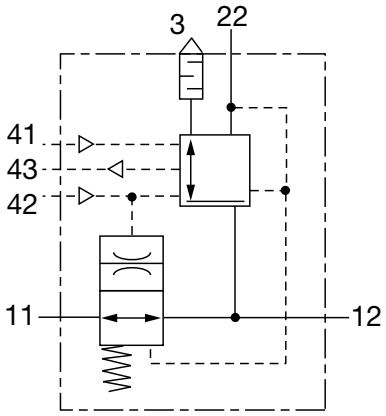

Technical Features

Maximum operating pressure:	8.5 bar
Operating Temperature Range:	-40 °C to +80 °C
Weight:	2.03 kg approx.

Range Overview

Part No.	Type No.	Air Port Threads				Predominance [bar]
		11 & 12	22	41, 42 & 43	3	
AC597B	–	M16x1.5	M16x1.5	M16x1.5	Silencer	0.2
AC597C	–					0.5
AC597D	–					0

Other versions are available.

Dimensions

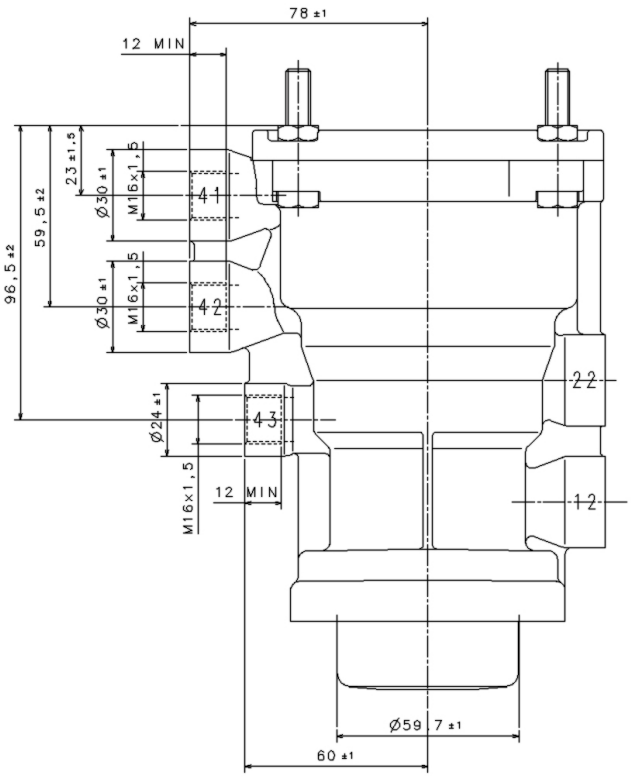
78 ±1
12 MIN
23 ±1,5
Ø30 ±1
M16x1,5
41
59,5 ±2
96,5 ±2
42
Ø24 ±1
43
22
12
Ø59,7 ±1
60 ±1

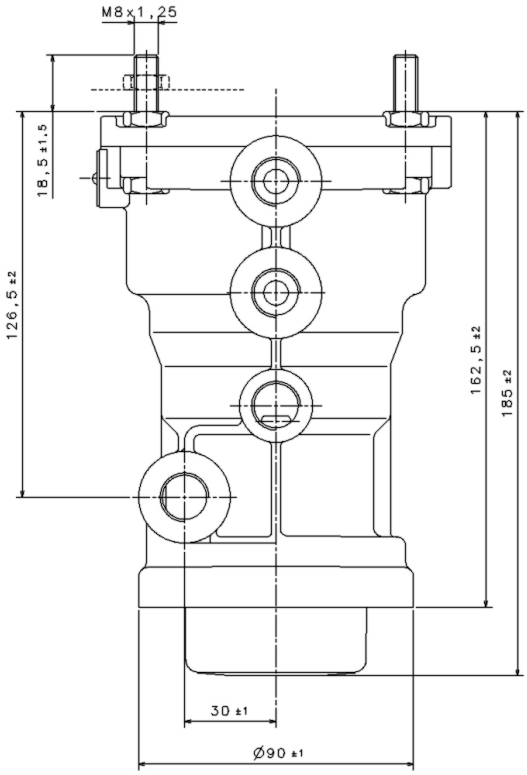
M8x1,25
18,5 ±1,5
126,5 ±2
162,5 ±2
185 ±2
30 ±1
Ø90 ±1

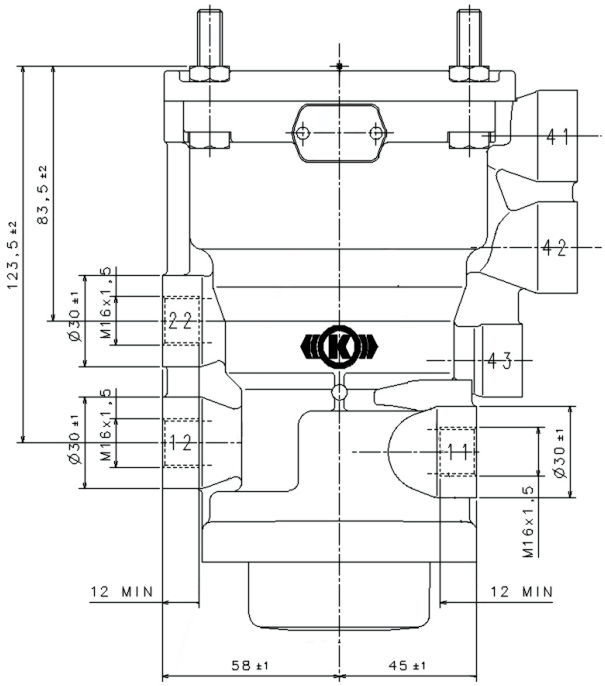
41
42
43
22
12
11
123,5 ±2
83,5 ±2
Ø30 ±1
M16x1,5
12 MIN
58 ±1
45 ±1

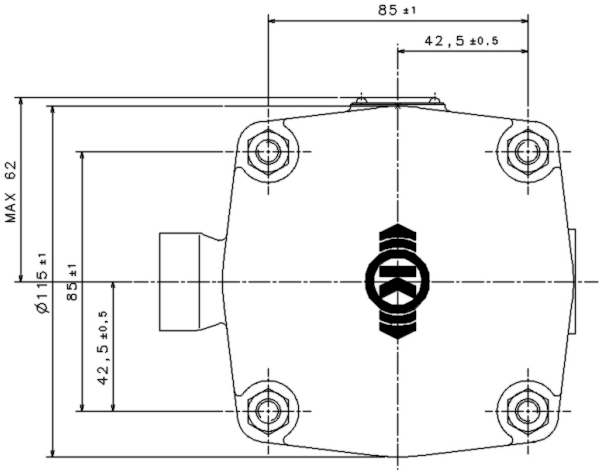
85 ±1
42,5 ±0,5
MAX 62
Ø115 ±1
85 ±1

Pneumatic Connections

Port	Function
11	Supply (Reservoir)
12	Delivery - Trailer Supply Line
12	Delivery - Trailer Control Line

Port	Function
41	Control from Service Brake Circuit 1
42	Control from Service Brake Circuit 2
43	Control from Hand Brake Valve (inverse)

Functional Diagrams

AC597B

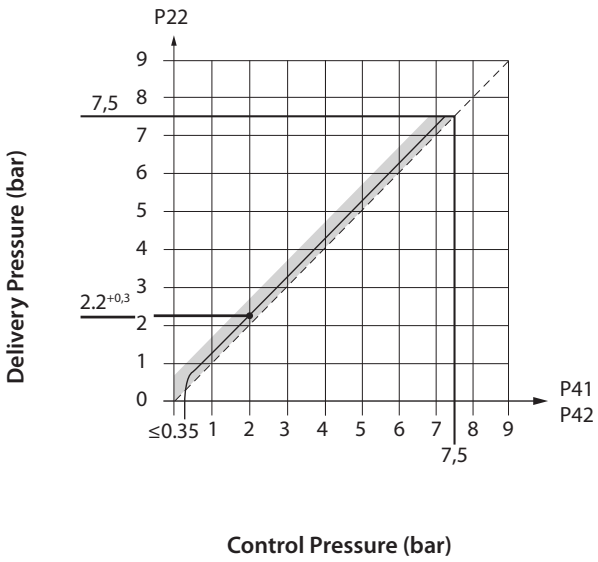

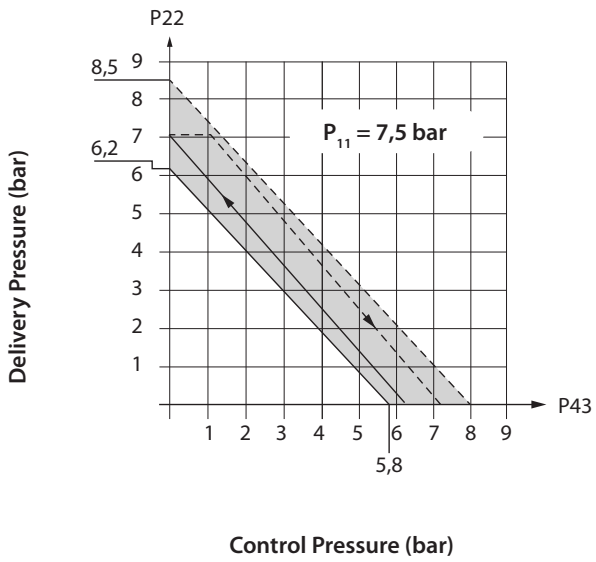

AC597C

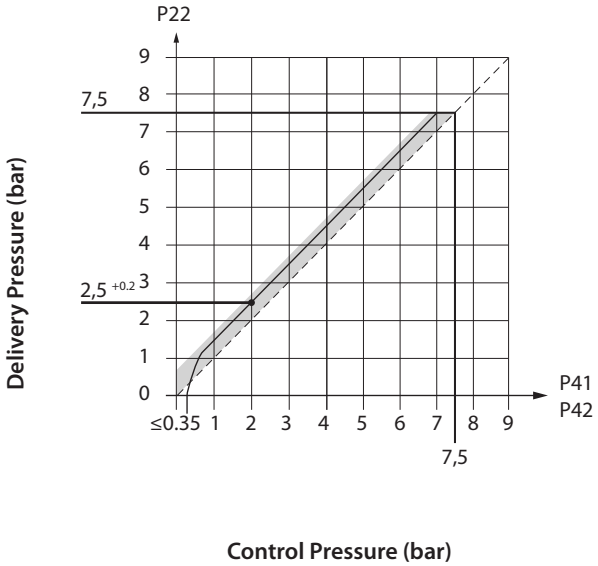

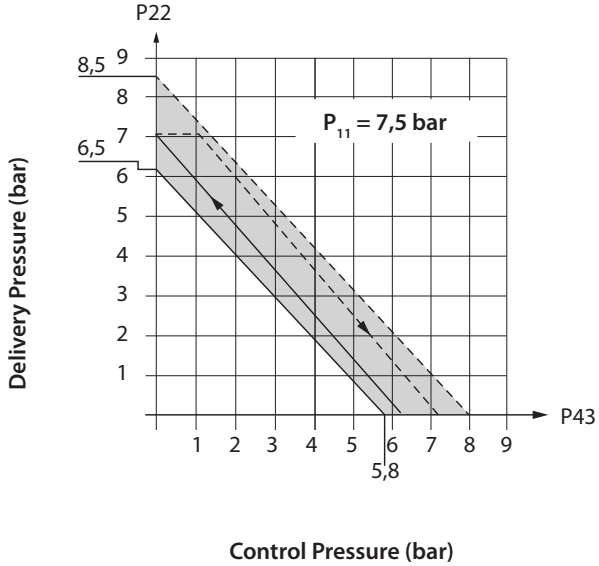

Functional Diagrams

AC597D

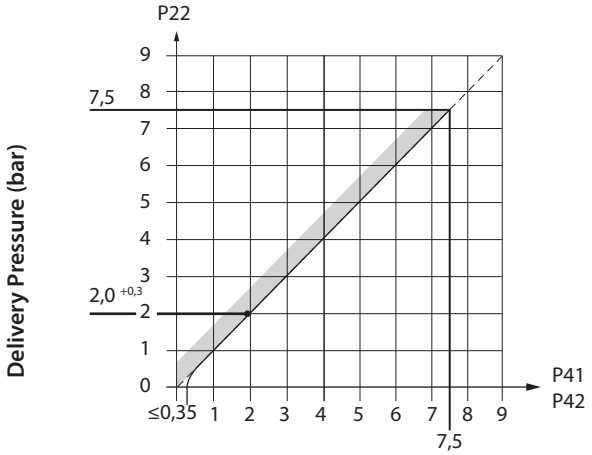

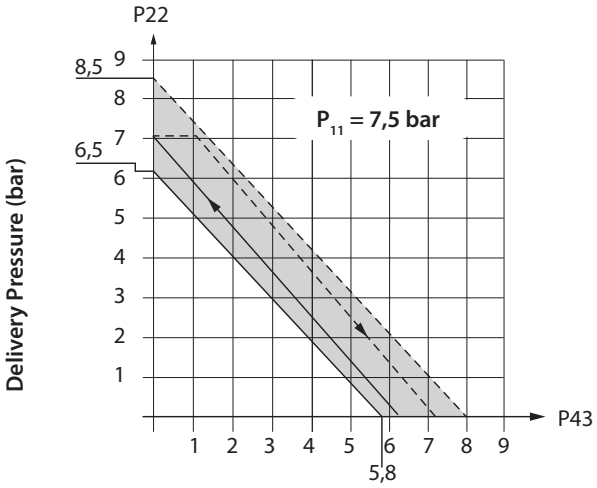

Installation

1) Mount the Trailer Control Valve inside the chassis and ensure that the piping runs do not allow moisture to drain into the valve.
2) Exhaust port 3 should point downwards with a maximum inclination of 15°. Do not allow obstruction to the flow of exhaust air.
3) Fix with: 4 x M8 x 1,25 nuts. Tightening torque max. 20 Nm

Note:
ensure that the silencer is masked during any painting of the vehicle.

Servicing

The Trailer Control Valves AC597. are serviceable using Service Kits:

Silencer Kit	076615102000
General Service Kit	076617402000

Revision Details

Rev. 001	May 2020	New Layout

Knorr-Bremse Group

Knorr-Bremse Systems for Commercial Vehicles
Moosacher Strasse 80 | 80809 Munich | Germany
Tel: +49 89 3547-0 | Fax: +49 89 3547-2767
WWW.KNORR-BREMSECVS.COM

Up-to-date information on our products can be found on our website www.knorr-bremsecvs.com

Note
All information is subject to change. A printed version of this document may therefore not correspond to the latest revision. To obtain the latest version, please visit our website www.knorr-bremseCVS.com or contact a Knorr-Bremse representative in your area.

If service work is carried out on a vehicle based on information provided herein, it is the responsibility of the workshop to ensure the vehicle is fully tested and in full functional order before the vehicle is returned into service. Knorr-Bremse accepts no liability for problems caused as a result of appropriate tests not being carried out.

Copyright © Knorr-Bremse AG
All rights reserved, including industrial property rights applications. Knorr-Bremse AG retains any power of disposal, such as for copying and transferring.

Disclaimer
The information contained herein is intended for the exclusive use of trained persons within the commercial vehicle industry, and must not be passed on to any third party. All recommendations regarding products and their servicing or usage are with reference to Knorr-Bremse products and should not be considered applicable to products from other manufacturers.
This information does not purport to be all-inclusive and no responsibility is assumed as a result of its use. We cannot accept any liability nor offer any guarantee regarding data accuracy, completeness or timeliness.
The information does not represent any guarantee or ensured characteristics of the Products or Systems described. No liability can be accepted based on the information, its use, recommendations or advice provided. In no event may we be held liable for any damage or loss except in the case of wilful intent or gross negligence on our part, or if any mandatory legal provisions apply.

This disclaimer is an English translation of a German text, which should be referred to for all legal purposes. Any legal disputes arising from the use of this information shall be subject to German law.